Class: **CAPE Pure Mathematics Unit 1**

Topic: **Past Paper June 2023 – Paper 2 – Solutions**

## June 2023 – Question 1 – Solution

(a) (i) Let $\boldsymbol{p}$ and $\boldsymbol{q}$ be any two propositions. Complete the truth table below. [3]

| $\boldsymbol{p}$ | $\boldsymbol{q}$ | $\boldsymbol{p} \to \boldsymbol{q}$ | $\boldsymbol{q} \to \boldsymbol{p}$ | $(\boldsymbol{p} \to \boldsymbol{q}) \wedge (\boldsymbol{q} \to \boldsymbol{p})$ |
|---|---|---|---|---|
| $T$ | $T$ | $T$ | $T$ | $T$ |
| $T$ | $F$ | $F$ | $T$ | $F$ |
| $F$ | $T$ | $T$ | $F$ | $F$ |
| $F$ | $F$ | $T$ | $T$ | $T$ |

(ii) Hence, state whether the statements $\boldsymbol{q} \to \boldsymbol{p}$ and $(\boldsymbol{p} \to \boldsymbol{q}) \wedge (\boldsymbol{q} \to \boldsymbol{p})$ are logically equivalent. **Justify your response.** [2]

The statements $\boldsymbol{q} \to \boldsymbol{p}$ and $(\boldsymbol{p} \to \boldsymbol{q}) \wedge (\boldsymbol{q} \to \boldsymbol{p})$ are not logically equivalent because their truth values are not the same according to the last two columns in the truth table above.

(b) Let $x$ and $y$ be negative real numbers and let $z$ be any real number. Use a counter example to show that the statement "if $\boldsymbol{x} > \boldsymbol{y}$ then $\boldsymbol{xz} > \boldsymbol{yz}$" is false. [3]

Statement: "if $\boldsymbol{x} > \boldsymbol{y}$ then $\boldsymbol{xz} > \boldsymbol{yz}$"

Let $x, y \in \mathbb{R}^-$ and let $z \in \mathbb{R}$.

Let $x = -1, y = -2$ and $z = -3$.

Then $x > y$ since $-1 > -2$.

Now consider,

$$xz > yz$$

$$(-1)(-3) > (-2)(-3)$$

$$3 > 6 \quad \text{which is false}$$

$\therefore$ "if $\boldsymbol{x > y}$ then $\boldsymbol{xz > yz}$" is false.

Q.E.D.

(c) The expression $f(x) = 6x^3 + px^2 + qx + 2$ is divisible by $2x - 1$ and has a remainder of 2 when divided by $x - 1$.

Calculate the values of $p$ and $q$. [9]

$$f(x) = 6x^3 + px^2 + qx + 2$$

Since $f(x)$ is divisible by $(2x - 1)$, then by the Factor Theorem, $f\left(\frac{1}{2}\right) = 0$.

$$f\left(\frac{1}{2}\right) = 6\left(\frac{1}{2}\right)^3 + p\left(\frac{1}{2}\right)^2 + q\left(\frac{1}{2}\right) + 2$$

$$0 = 6\left(\frac{1}{8}\right) + p\left(\frac{1}{4}\right) + \frac{1}{2}q + 2$$

$$0 = \frac{3}{4} + \frac{1}{4}p + \frac{1}{2}q + 2$$

$(\times 4)$

$$0 = 3 + p + 2q + 8$$

$$p = -2q - 3 - 8$$

$$p = -2q - 11 \qquad \rightarrow \text{Equation 1}$$

Since $f(x)$ has a remainder of 2 when divided by $(x-1)$, then by the Remainder Theorem, $f(1) = 2$.

$f(1) = 6(1)^3 + p(1)^2 + q(1) + 2$

$2 = 6 + p + q + 2$

$0 = 6 + p + q$

$p = -q - 6$ $\rightarrow$ Equation 2

Equating Equation 1 and Equation 2 gives:

$-2q - 11 = -q - 6$

$-2q + q = 11 - 6$

$-q = 5$

$q = -5$

Substituting $q = -5$ into Equation 2 gives:

$p = -(-5) - 6$

$= 5 - 6$

$= -1$

$\therefore$ The values of $p = -1$ and $q = -5$.

(d) (i) Solve the logarithmic equation $\log_3(x^2-9)-\log_3(x+3)=3$. [4]

$$\log_3(x^2-9)-\log_3(x+3)=3$$

$$\log_3\frac{(x^2-9)}{(x+3)}=3$$

Converting to exponential form gives:

$$\frac{(x^2-9)}{(x+3)}=3^3$$

$$\frac{(x-3)(x+3)}{(x+3)}=27$$

$$x-3=27$$

$$x=27+3$$

$$x=30$$

(ii) Show that $\sqrt{320x^3}+\sqrt{125x^3}$ simplifies to $13x\sqrt{5x}$. [4]

$$\sqrt{320x^3}+\sqrt{125x^3}=\sqrt{320}\sqrt{x^3}+\sqrt{125}\sqrt{x^3}$$

$$=\sqrt{64\times5}\sqrt{x^2\times x}+\sqrt{25\times5}\sqrt{x^2\times x}$$

$$=\sqrt{64}\sqrt{5}\sqrt{x^2}\sqrt{x}+\sqrt{25}\sqrt{5}\sqrt{x^2}\sqrt{x}$$

$$=8\cdot\sqrt{5}\cdot x\cdot\sqrt{x}+5\cdot\sqrt{5}\cdot x\cdot\sqrt{x}$$

$$=8x\sqrt{5x}+5x\sqrt{5x}$$

$$=13x\sqrt{5x}$$

$$\therefore\sqrt{320x^3}+\sqrt{125x^3}=13x\sqrt{5x}$$

Q.E.D.

**Total: 25 marks**

June 2023 – Question 2 – Solution

(a) Let $f(x) = 7x + 2$. Prove that $f$ is bijective. [5]

$f(x) = 7x + 2\,, x \in \mathbb{R}$

A function $f$ is injective if for every $y$ in the codomain, there is at most one $x$ in the domain such that $f(x) = y$.

Since $f(x) = 7x + 2$, then $f(a) = 7a + 2$ and $f(b) = 7b + 2$.

If $f(a) = f(b)$

Then $7a + 2 = 7b + 2$

$\Rightarrow 7a = 7b$

$\Rightarrow \quad a = b$

Since $f(a) = f(b) \Rightarrow a = b$, then $f(x)$ is injective.

A function, $f$, is said to be surjective if for every $y$ in the codomain, there is at least one $x$ in the domain such that $f(x) = y$.

Let $y$ be an element of the codomain.

$y = 7x + 2$

$y - 2 = 7x$

$x = \frac{y-2}{7}$

Hence, for every $x$ in the domain, there is a corresponding $y$ in the codomain.

That is, $\forall y \in \mathbb{R}, \exists x \in \mathbb{R}$. Therefore, $f$ is surjective.

Since $f$ is injective and surjective, $f$ is bijective.

Q.E.D.

(b) The roots of the cubic $3x^3 - x^2 - 2x + 1 = 0$ are $\alpha, \beta$, and $\gamma$. Determine the equation whose roots are $\frac{1}{\alpha}, \frac{1}{\beta}$ and $\frac{1}{\gamma}$. [8]

$3x^3 - x^2 - 2x + 1 = 0$

where $a = 3, b = -1, c = -2$ and $d = 1$

$$\alpha + \beta + \gamma = -\frac{b}{a}$$
$$= \frac{-(-1)}{3}$$
$$= \frac{1}{3}$$

$$\alpha\beta + \beta\gamma + \alpha\gamma = \frac{c}{a}$$
$$= -\frac{2}{3}$$

$$\alpha\beta\gamma = -\frac{d}{a}$$
$$= -\frac{1}{3}$$

For the new roots:

$$\frac{1}{\alpha}+\frac{1}{\beta}+\frac{1}{\gamma}=\frac{\beta\gamma+\alpha\gamma+\alpha\beta}{\alpha\beta\gamma}$$

$$=-\frac{2}{3}\div\left(-\frac{1}{3}\right)$$

$$=-\frac{2}{3}\times-\frac{3}{1}$$

$$=2$$

$$\left(\frac{1}{\alpha}\right)\left(\frac{1}{\beta}\right)+\left(\frac{1}{\beta}\right)\left(\frac{1}{\gamma}\right)+\left(\frac{1}{\alpha}\right)\left(\frac{1}{\gamma}\right)=\frac{\gamma+\alpha+\beta}{\alpha\beta\gamma}$$

$$=\frac{1}{3}\div\left(-\frac{1}{3}\right)$$

$$=-1$$

$$\left(\frac{1}{\alpha}\right)\left(\frac{1}{\beta}\right)\left(\frac{1}{\gamma}\right)=\frac{1}{\alpha\beta\gamma}$$

$$=1\div\left(-\frac{1}{3}\right)$$

$$=1\times-3$$

$$=-3$$

∴ The new equation is:

$$x^3-(sum\ of\ roots)x^2+(sum\ of\ the\ product\ of\ two\ of\ the\ roots\ at\ a\ time)x-(product\ of\ the\ roots)=0$$

$$x^3-2x^2-x-(-3)=0$$

$$x^3-2x^2-x+3=0$$

(c) The diagram below shows the graph of the curve $f(x) = x^2 + 6x + 8$.

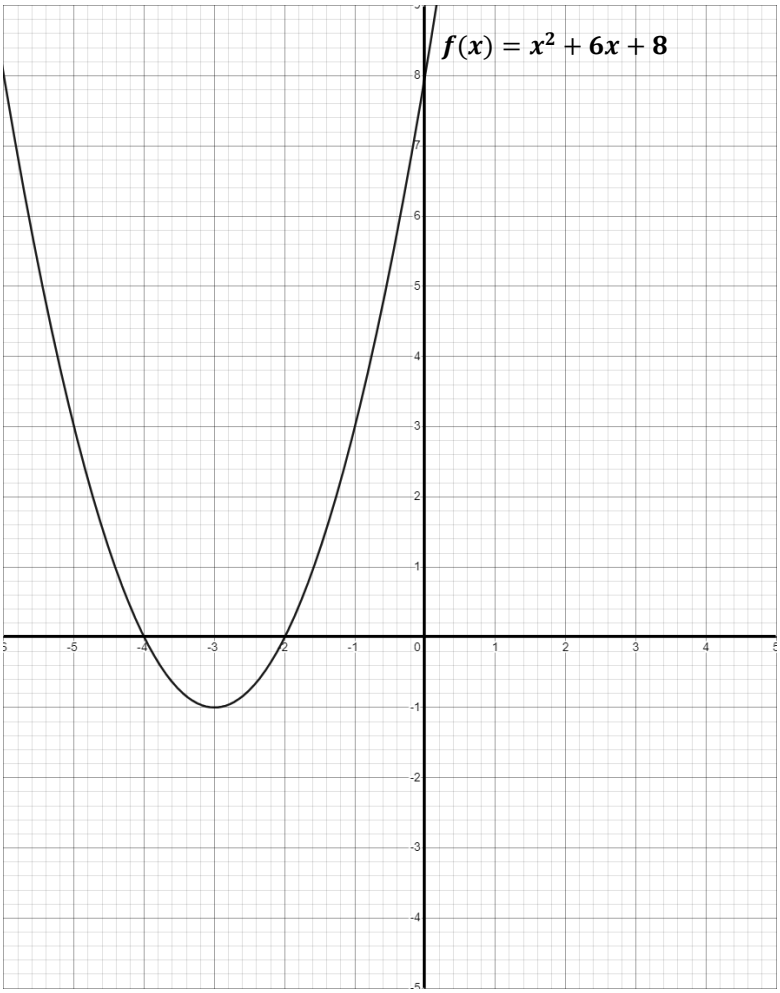


(i) On the axes provided above, sketch and label the graph of

$g(x) = |x^2 + 6x + 8|$. [3]

The function of $f(x) = x^2 + 6x + 8$.

The function of $g(x) = |f(x)|$

$= |x^2 + 6x + 8|$

To sketch the graph of $g(x)$, we take any part of the graph of $f(x)$ that is below the $x$-axis and reflect it across the $x$-axis.

The graph of $g(x) = |x^2 + 6x + 8|$ is shown below:

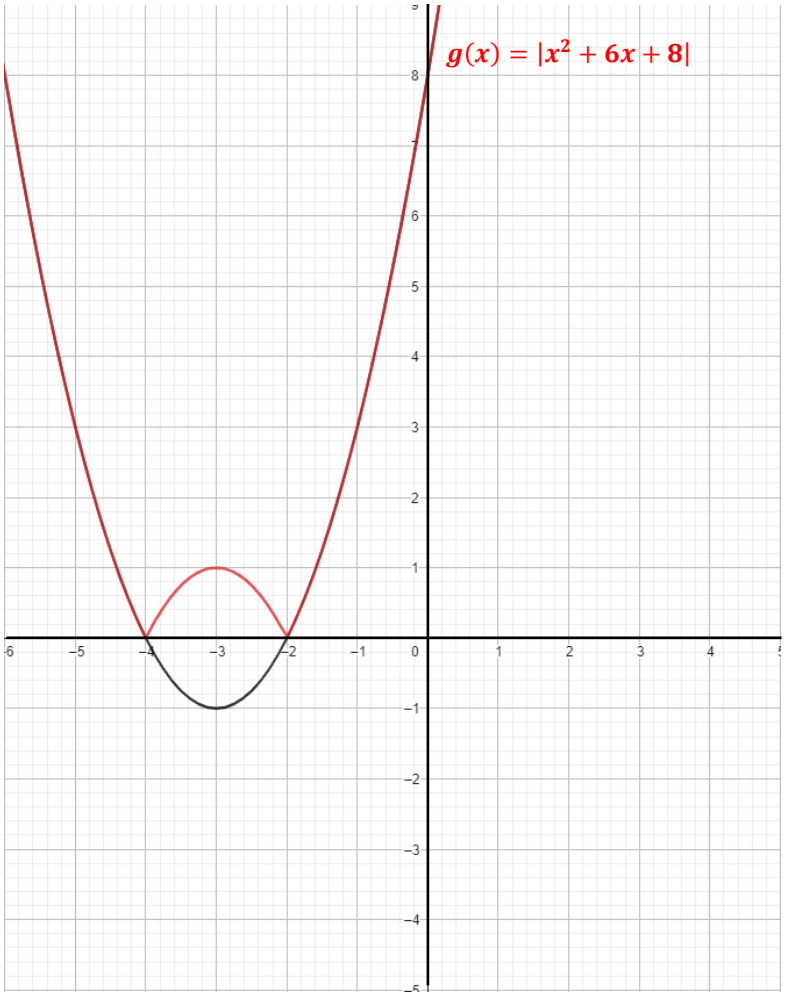


(ii) On the same axes, sketch and label the inverse of $f$ for $x \geq -3$. [5]

| Points on $f(x)$ | $\rightarrow$ | Points on $f^{-1}(x)$ |
|---|---|---|
| $(-3, -1)$ | $\rightarrow$ | $(-1, -3)$ |
| $(-2, 0)$ | $\rightarrow$ | $(0, -2)$ |
| $(-1, 3)$ | $\rightarrow$ | $(3, -1)$ |
| $(0, 8)$ | $\rightarrow$ | $(8, 0)$ |

To sketch the graph of $f^{-1}(x)$, we reflect the graph of $f(x)$ across the line $y = x$. We will do so for the part of the graph of $f$ where $x \geq -3$.

The graph of $f^{-1}(x)$ is shown below:

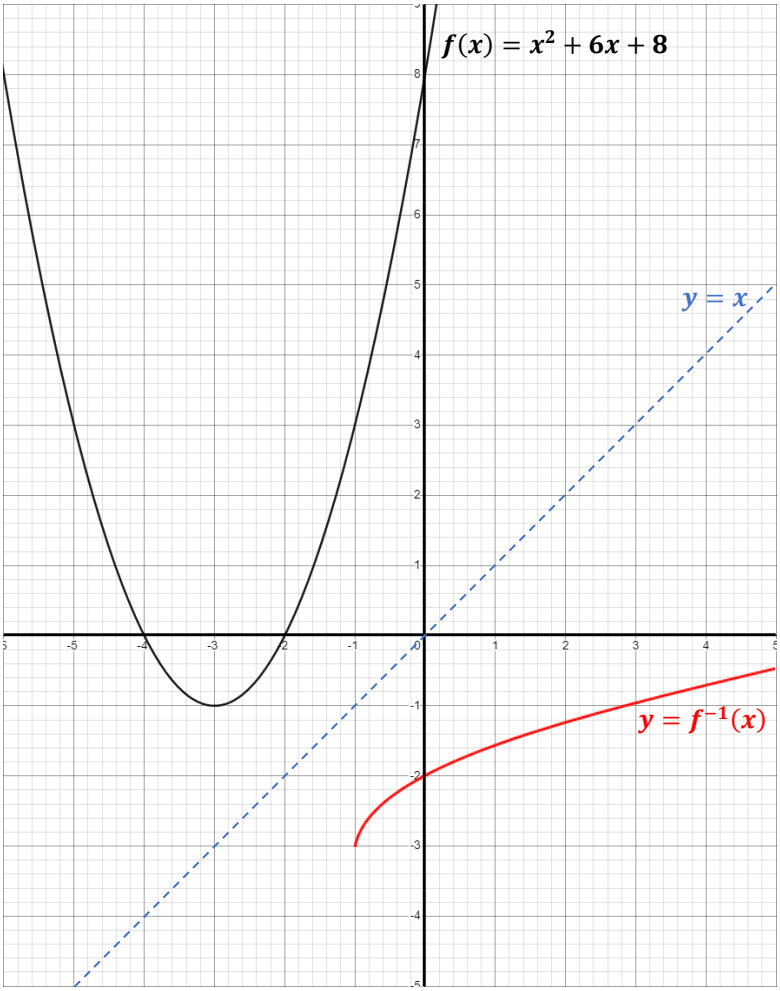


(d) Given that $g(x) = \frac{2x+3}{x+3}$, prove that $g^{-1}(2)$ does not exist. [4]

$g(x) = \frac{2x+3}{x+3}$

Let $y = g(x)$.

$y = \frac{2x+3}{x+3}$

Interchanging variables $x$ and $y$ gives:

$x = \frac{2y+3}{y+3}$

Making $y$ the subject of the formula:

$x(y+3) = 2y+3$

$xy + 3x = 2y + 3$

$xy - 2y = 3 - 3x$

$y(x-2) = 3 - 3x$

$y = \frac{3-3x}{x-2}$

So, we get $g^{-1}(x) = \frac{3-3x}{x-2}$.

A function is discontinuous when the denominator is equal to zero.

$x - 2 = 0$

$x = 2$

Also, when $x = 2$,

$g^{-1}(2) = \frac{3-3(2)}{2-2}$

$= \frac{3-3(2)}{0}$ which is indeterminate

$\therefore g^{-1}(2)$ does not exist.

Q.E.D.

**Total: 25 marks**

## June 2023 – Question 3 – Solution

(a) Prove that

$$\frac{1-\sin\theta}{1+\sin\theta} = (\sec\theta - \tan\theta)^2 \,. \qquad [9]$$

Taking R.H.S:

$$(\sec\theta - \tan\theta)^2 = \sec^2\theta - 2\sec\theta\tan\theta + \tan^2\theta$$

$$= \frac{1}{\cos^2\theta} - 2\cdot\frac{1}{\cos\theta}\cdot\frac{\sin\theta}{\cos\theta} + \frac{\sin^2\theta}{\cos^2\theta}$$

$$= \frac{1}{\cos^2\theta} - \frac{2\sin\theta}{\cos^2\theta} + \frac{\sin^2\theta}{\cos^2\theta}$$

$$= \frac{1-2\sin\theta+\sin^2\theta}{\cos^2\theta}$$

$$= \frac{(1-\sin\theta)^2}{1-\sin^2\theta}$$

$$= \frac{(1-\sin\theta)(1-\sin\theta)}{(1-\sin\theta)(1+\sin\theta)}$$

$$= \frac{1-\sin\theta}{1+\sin\theta}$$

$$= \text{R.H.S.}$$

$$\therefore (\sec\theta - \tan\theta)^2 = \frac{1-\sin\theta}{1+\sin\theta}$$

Q.E.D.

(b) Solve the equation $2\cos^2 x - 3\sin x = 3$ for $0 \le \theta \le 2\pi$. [9]

$$2\cos^2 x - 3\sin x = 3$$

$$2(1 - \sin^2 x) - 3\sin x = 3$$

$$2 - 2\sin^2 x - 3\sin x = 3$$

$$2\sin^2 x + 3\sin x + 3 - 2 = 0$$

$$2\sin^2 x + 3\sin x + 1 = 0$$

$$(2\sin x + 1)(\sin x + 1) = 0$$

Either $2\sin x + 1 = 0$ or $\sin x + 1 = 0$

$$2\sin x = -1 \qquad \sin x = -1$$

$$\sin x = -\frac{1}{2}$$

Consider

$\sin x = -\frac{1}{2}$

$x = \pi + \frac{\pi}{6}, 2\pi - \frac{\pi}{6}$

$x = \frac{7\pi}{6}, \frac{11\pi}{6}$

| | $\frac{\pi}{6}$ |
|---|---|
| $-$ | $-$ |

Consider

$\sin x = -1$

$x = \frac{3\pi}{2}$

$\therefore x = \frac{7\pi}{6}, \frac{3\pi}{2}, \frac{11\pi}{6}$

(c) Show that $\cos\left(\frac{\pi}{2}+x\right) = -\sin x$. [4]

Taking L.H.S:

$$\cos\left(\frac{\pi}{2}+x\right) = \cos\frac{\pi}{2}\cos x - \sin\frac{\pi}{2}\sin x$$

$$= (0)\cos x - (1)\sin x$$

$$= 0 - \sin x$$

$$= -\sin x$$

$$= \text{R.H.S.}$$

$$\therefore \cos\left(\frac{\pi}{2}+x\right) = -\sin x$$

Q.E.D.

(d) $A$ and $B$ are acute angles such that $\sin A = \frac{3}{5}$ and $\cos B = \frac{5}{13}$. Calculate, without using tables or calculators, the EXACT value of $\cos(A-B)$. [3]

We are given that $\sin A = \frac{3}{5}$ and $\cos B = \frac{5}{13}$.

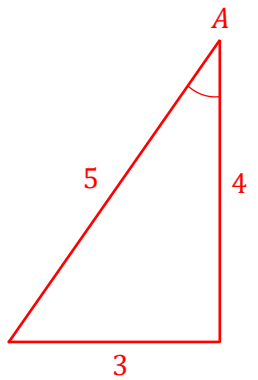


From this triangle, we have $\cos A = \frac{4}{5}$ and $\sin A = \frac{3}{5}$.

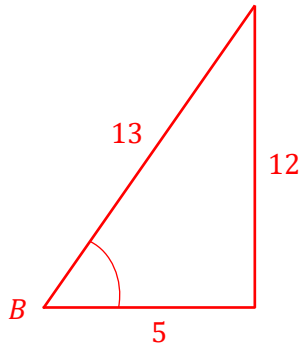


From this triangle, we have $\cos B = \frac{5}{13}$ and $\sin B = \frac{12}{13}$.

Hence,

$$\cos(A - B) = \cos A \cos B + \sin A \sin B$$

$$= \left(\frac{4}{5}\right)\left(\frac{5}{13}\right) + \left(\frac{3}{5}\right)\left(\frac{12}{13}\right)$$

$$= \frac{20}{65} + \frac{36}{65}$$

$$= \frac{56}{65}$$

**Total: 25 marks**

June 2023 – Question 4 – Solution

(a) Obtain the Cartesian equation of the curve given in parametric form

$$x = 3\cos t \text{ and } y = 4\sin t$$ [5]

$x = 3\cos t$ and $y = 4\sin t$

$\frac{x}{3} = \cos t$ $\frac{y}{4} = \sin t$

Now,

$\sin^2 t + \cos^2 t = 1$

$\left(\frac{x}{3}\right)^2 + \left(\frac{y}{4}\right)^2 = 1$

$\frac{x^2}{9} + \frac{y^2}{16} = 1$

$(\times 144)$

$16x^2 + 9y^2 = 144$

$\therefore$ The Cartesian equation of the curve is $16x^2 + 9y^2 = 144$.

(b) The equation of a line is $x = 2 + t$, $y = 1 - 3t$ and $z = 4 + t$, and the equation of a plane is $x + 2y + z = 12$. Determine the point of intersection of the line and the plane. [6]

Equation of the line: $x = 2 + t, y = 1 - 3t, z = 4 + t$

Equation of the plane: $x + 2y + z = 12$

Substituting the equation of the line into the equation of the plane gives:

$$(2 + t) + 2(1 - 3t) + (4 + t) = 12$$

$$2 + t + 2 - 6t + 4 + t = 12$$

$$8 - 4t = 12$$

$$4t = 8 - 12$$

$$4t = -4$$

$$t = \frac{-4}{4}$$

$$t = -1$$

Substituting $t = -1$ into the equation of the line gives:

| | | |
|---|---|---|
| $x = 2 + (-1)$ | $y = 1 - 3(-1)$ | $z = 4 + (-1)$ |
| $= 2 - 1$ | $= 1 + 3$ | $= 4 - 1$ |
| $= 1$ | $= 4$ | $= 3$ |

$\therefore$ The point of intersection is $(1, 4, 3)$.

(c) (i) Determine the vector equation of the plane which passes through $(1, 5, -1)$ and which is perpendicular to the vector $\begin{pmatrix} 2 \\ 4 \\ 3 \end{pmatrix}$. [4]

Let $\boldsymbol{a} = \begin{pmatrix} 1 \\ 5 \\ -1 \end{pmatrix}$ and $\boldsymbol{n} = \begin{pmatrix} 2 \\ 4 \\ 3 \end{pmatrix}$.

The vector equation of the plane is:

$$\boldsymbol{r} \cdot \boldsymbol{n} = \boldsymbol{a} \cdot \boldsymbol{n}$$

$$\boldsymbol{r} \cdot \begin{pmatrix} 2 \\ 4 \\ 3 \end{pmatrix} = \begin{pmatrix} 1 \\ 5 \\ -1 \end{pmatrix} \cdot \begin{pmatrix} 2 \\ 4 \\ 3 \end{pmatrix}$$

$$\boldsymbol{r} \cdot \begin{pmatrix} 2 \\ 4 \\ 3 \end{pmatrix} = (1)(2) + (5)(4) + (-1)(3)$$

$$\boldsymbol{r} \cdot \begin{pmatrix} 2 \\ 4 \\ 3 \end{pmatrix} = 2 + 20 - 3$$

$$\boldsymbol{r} \cdot \begin{pmatrix} 2 \\ 4 \\ 3 \end{pmatrix} = 19 \qquad \text{or} \qquad \boldsymbol{r} \cdot \left(2\hat{\boldsymbol{\imath}} + 4\hat{\boldsymbol{\jmath}} + 3\hat{\boldsymbol{k}}\right) = 19$$

(ii) Hence, determine the coordinates of the point in the plane where $y = 3$ and $z = 1$. [3]

Let $r = \begin{pmatrix} x \\ y \\ z \end{pmatrix}$.

The vector equation of the plane is $\boldsymbol{r} \cdot \begin{pmatrix} 2 \\ 4 \\ 3 \end{pmatrix} = 19$.

The Cartesian equation of the plane is

$$\begin{pmatrix} x \\ y \\ z \end{pmatrix} \cdot \begin{pmatrix} 2 \\ 4 \\ 3 \end{pmatrix} = 19$$

$2x + 4y + 3z = 19$

When $y = 3$ and $z = 1$,

$2x + 4(3) + 3(1) = 19$

$2x + 12 + 3 = 19$

$2x = 19 - 12 - 3$

$2x = 4$

$x = \frac{4}{2}$

$x = 2$

$\therefore$ The coordinates of the point in the plane where $y = 3$ and $z = 1$ is $(2, 3, 1)$.

(d) Given that a line is parallel to the vector $\boldsymbol{u} = \begin{pmatrix} 1 \\ -3 \\ 1 \end{pmatrix}$ and that the vector $\boldsymbol{v} = \begin{pmatrix} 1 \\ 2 \\ 1 \end{pmatrix}$ is normal to the plane, calculate the angle between the line and the plane. [7]

We are given:

$\boldsymbol{u} = \begin{pmatrix} 1 \\ -3 \\ 1 \end{pmatrix}$ and $\boldsymbol{v} = \begin{pmatrix} 1 \\ 2 \\ 1 \end{pmatrix}$

Now,

$$\boldsymbol{u} \cdot \boldsymbol{v} = \begin{pmatrix} 1 \\ -3 \\ 1 \end{pmatrix} \cdot \begin{pmatrix} 1 \\ 2 \\ 1 \end{pmatrix}$$

$$= (1)(1) + (-3)(2) + (1)(1)$$

$$= 1 - 6 + 1$$

$$= -4$$

$$|\boldsymbol{u}| = \sqrt{(1)^2 + (-3)^2 + (1)^2}$$

$$= \sqrt{1 + 9 + 1}$$

$$= \sqrt{11}$$

$$|\boldsymbol{v}| = \sqrt{(1)^2 + (2)^2 + (1)^2}$$

$$= \sqrt{1 + 4 + 1}$$

$$= \sqrt{6}$$

Now,

$$\cos\theta = \frac{\boldsymbol{u} \cdot \boldsymbol{v}}{|\boldsymbol{u}||\boldsymbol{v}|}$$

$$\cos\theta = \frac{-4}{\sqrt{11}\sqrt{6}}$$

$$\cos\theta = \frac{-4}{\sqrt{66}}$$

$$\theta = \cos^{-1}\left(\frac{-4}{\sqrt{66}}\right)$$

$$\theta = 119.5° \qquad \text{(to 1 decimal place)}$$

Consider the sketch below of the plane and the line.

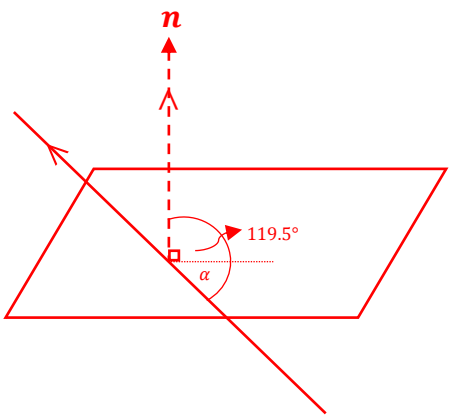


Since $\theta = 119.5°$ is the angle between the normal and the line, then the angle between the line and the plane is

$\alpha = \theta - 90°$

$= 119.5° - 90°$

$= 29.5°$

**Total: 25 marks**

## June 2023 – Question 5 – Solution

(a) Determine $\lim_{x\to\infty} \frac{2x^3-4x+1}{3x^4+x^2-2}$. [5]

$$\lim_{x\to\infty} \frac{2x^3-4x+1}{3x^4+x^2-2} = \lim_{x\to\infty} \frac{\frac{2x^3}{x^4}-\frac{4x}{x^4}+\frac{1}{x^4}}{\frac{3x^4}{x^4}+\frac{x^2}{x^4}-\frac{2}{x^4}}$$

$$= \lim_{x\to\infty} \frac{\frac{2}{x}-\frac{4}{x^3}+\frac{1}{x^4}}{3+\frac{1}{x^2}-\frac{2}{x^4}}$$

$$= \frac{0-0+0}{3+0-0}$$

$$= \frac{0}{3}$$

$$= 0$$

(b) A student goes to the water cooler to get a drink of water. The student has a cup in the shape of a cone. The water from the cooler is filling the cup at the rate of 12 $cm^3$ per second. If the height, $h$, of the cup is 16 $cm$ and the radius, $r$, of its circular opening is 8 $cm$, how fast is the water in the cup rising when the height is 4 $cm$?

**The volume of a cone is $V = \frac{1}{3}\pi r^2 h$, where $r$ is the radius and $h$ is the height.** [8]

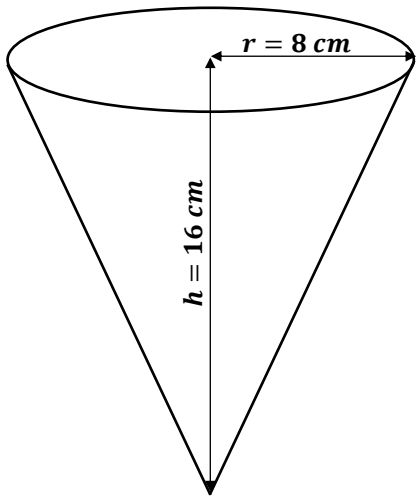

From the question, $\frac{dV}{dt} = 12\ cm^3 s^{-1}$.

From the diagram, $r = 8\ cm$ and $h = 16\ cm$.

$\frac{r}{h} = \frac{8}{16}$

$\frac{r}{h} = \frac{1}{2}$

$r = \frac{1}{2}h$

Now,

$V = \frac{1}{3}\pi r^2 h$

Substituting $r = \frac{1}{2}h$ gives:

$$V = \frac{1}{3}\pi\left(\frac{1}{2}h\right)^2 h$$

$$V = \frac{1}{3}\pi \times \frac{1}{4} \times h^2 \times h$$

$$V = \frac{1}{12}\pi h^3$$

$$\frac{dV}{dh} = \frac{1}{12}(3)\pi h^{3-1}$$

$$\frac{dV}{dh} = \frac{1}{4}\pi h^2$$

$$\frac{dV}{dh} = \frac{\pi h^2}{4}$$

$$\therefore \frac{dh}{dV} = \frac{4}{\pi h^2}$$

Hence,

$$\frac{dh}{dt} = \frac{dh}{dV} \times \frac{dV}{dt}$$

$$= \frac{4}{\pi h^2} \times 12$$

$$= \frac{48}{\pi h^2}\ cms^{-1}$$

When $h = 4\ cm$,

$$\frac{dh}{dt} = \frac{48}{\pi(4)^2}$$

$$= \frac{48}{16\pi}$$

$$= \frac{3}{\pi}\ cms^{-1}$$

$\therefore$ The water in the cup is rising at a rate of $\frac{3}{\pi}\ cms^{-1}$.

(c) A manufacturer of containers wants to make a container in the shape of a cuboid with an open top. The container is made from a flat sheet of metal of length 16 metres and width 13 metres. Squares of length $x$ metres are cut from each corner of the sheet to create the sides of the container.

(i) Show that the volume of the container is $4x^3 - 58x^2 + 208x$. [2]

Consider the diagram below:

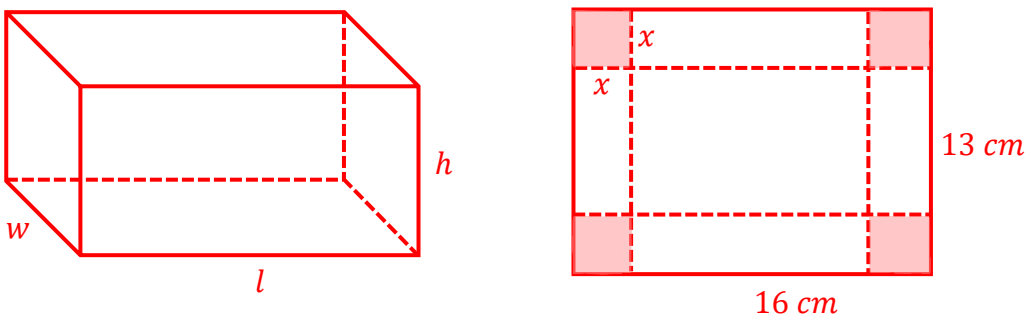


Length $= 16 - 2x$

Width $= 13 - 2x$

Height $= x$

The volume of the container is

$V = l \times w \times h$

$= (16 - 2x) \times (13 - 2x) \times (x)$

$= (208 - 26x - 32x + 4x^2)x$

$= (208 - 58x + 4x^2)x$

$= 208x - 58x^2 + 4x^3$

$= 4x^3 - 58x^2 + 208x$

$\therefore V = 4x^3 - 58x^2 + 208x$

Q.E.D.

(ii) Using the method of the second derivative, determine the height, $x$, that will maximize the volume of the container. [9]

$V = 4x^3 - 58x^2 + 208x$

$\frac{dV}{dx} = 12x^2 - 116x + 208$

At stationary points, $\frac{dV}{dx} = 0$.

When $\frac{dV}{dx} = 0$.

$12x^2 - 116x + 208 = 0$

$(\div 4)$

$3x^2 - 29x + 52 = 0$

which is in the form $ax^2 + bx + c = 0$,

where $a = 3, b = -29$ and $c = 52$.

Using the quadratic formula,

$$x = \frac{-b \pm \sqrt{b^2 - 4ac}}{2a}$$

$$= \frac{-(-29) \pm \sqrt{(-29)^2 - 4(3)(52)}}{2(3)}$$

$$= \frac{29 \pm \sqrt{841 - 624}}{6}$$

$$= \frac{29 \pm \sqrt{217}}{6}$$

Either $x = \frac{29 - \sqrt{217}}{6}$ or $x = \frac{29 + \sqrt{217}}{6}$

$= 2.38\ m$ (to 3 s.f.) $= 7.29\ m$ (to 3 s.f.)

Using the second derivative test,

$$\frac{dV}{dx} = 12x^2 - 116x + 208$$

$$\frac{d^2V}{dx^2} = 24x - 116$$

We now substitute the values of $x$ in the second derivative to determine the nature at that point.

When $x = 2.38$,

$$\frac{d^2V}{dx^2} = 24(2.38) - 116$$

$$= -58.88 \quad (< 0)$$

Since $\frac{d^2V}{dx^2} < 0$, $x = 2.38\ m$ gives maximum volume.

When $x = 7.29$,

$\frac{d^2V}{dx^2} = 24(7.29) - 116$

$= 58.96 \quad (> 0)$

Since $\frac{d^2V}{dx^2} > 0$, $x = 7.29\ m$ gives minimum volume.

$\therefore$ The height that will maximize the volume of the container is $x = 2.38\ m$.

(iii) Determine the maximum volume of the container. [1]

$V = 4x^3 - 58x^2 + 208x$

When $x = 2.38\ m$,

$V = 4(2.38)^3 - 58(2.38)^2 + 208(2.38)$

$= 220.43\ m^3$ (to 2 decimal places)

$\therefore$ The maximum volume of the container is $220.43\ m^3$.

**Total: 25 marks**

June 2023 – Question 6 – Solution

(a) Calculate the volume of the solid generated by revolving the region bounded by the line $y = 3x - 6$ and the parabola $y = x^2 + 3x - 2$, on the interval $[0, 1]$ about the $x$-axis.

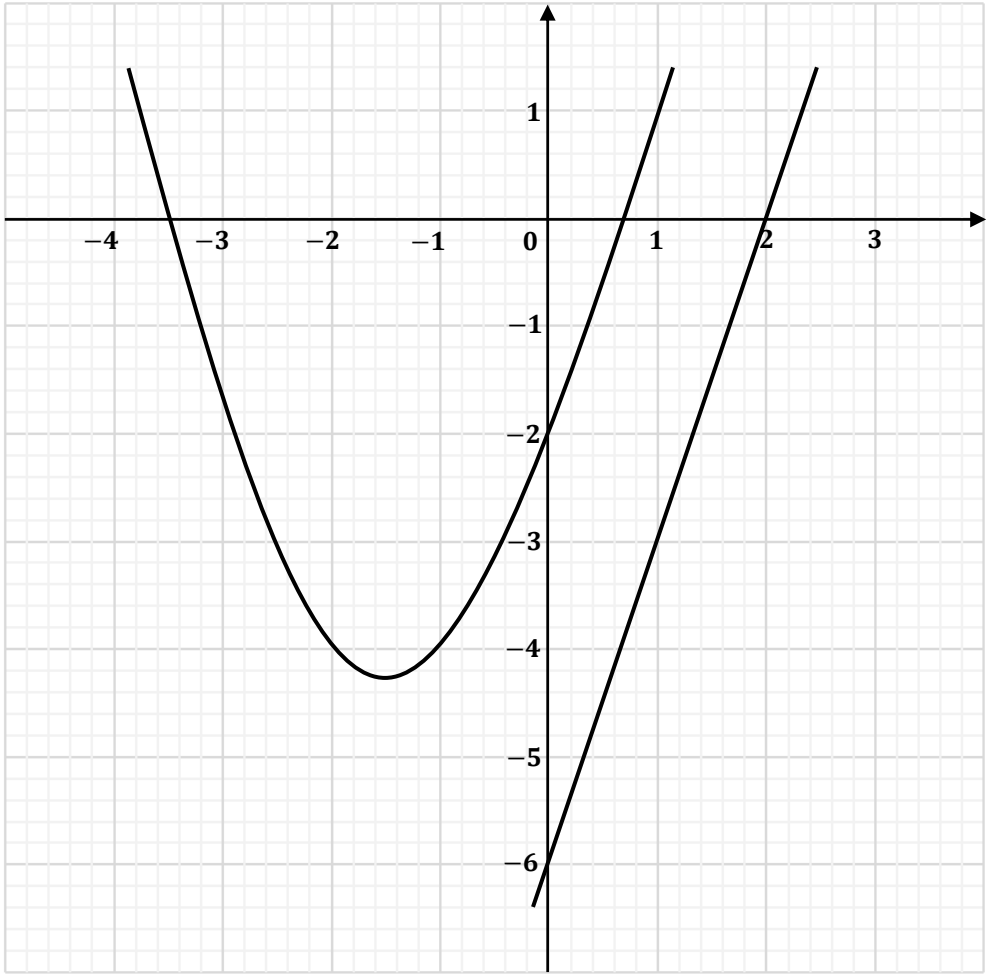


$$y = x^2 + 3x - 2$$

$$y^2 = (x^2 + 3x - 2)^2$$

$$= (x^2 + 3x - 2)(x^2 + 3x - 2)$$

$$= x^2 + 3x^3 - 2x^2 + 3x^3 + 9x^2 - 6x - 2x^2 - 6x + 4$$

$$= x^4 + 6x^3 + 5x^2 - 12x + 4$$

The volume about the curve is

$$\text{Volume} = \pi \int_a^b y^2\, dx$$

$$= \pi \int_0^1 (x^4 + 6x^3 + 5x^2 - 12x + 4)\, dx$$

$$= \pi \left[\frac{x^5}{5} + \frac{6x^4}{4} + \frac{5x^3}{3} - \frac{12x^2}{2} + 4x\right]_0^1$$

$$= \pi \left[\frac{x^5}{5} + \frac{3x^4}{2} + \frac{5x^3}{3} - 6x^2 + 4x\right]_0^1$$

$$= \pi \left[\frac{(1)^5}{5} + \frac{3(1)^4}{2} + \frac{5(1)^3}{3} - 6(1)^2 + 4(1)\right] - \left[\frac{(0)^5}{5} + \frac{3(0)^4}{2} + \frac{5(0)^3}{3} - 6(0)^2 + 4(0)\right]$$

$$= \pi \left[\frac{1}{5} + \frac{3}{2} + \frac{5}{3} - 6 + 4 - (0)\right]$$

$$= \frac{41\pi}{30}\ units^3$$

Now,

$$y = 3x - 6$$

$$y^2 = (3x - 6)^2$$

$$= 9x^2 - 36x + 36$$

The volume about the line is

$$\text{Volume} = \pi \int_a^b y^2\, dx$$

$$= \pi \int_0^1 (9x^2 - 36x + 36)\, dx$$

$$= \pi \left[\frac{9x^3}{3} - \frac{36x^2}{2} + 36x\right]_0^1$$

$$= \pi [3x^3 - 18x^2 + 36x]_0^1$$

$$= \pi [3(1)^3 - 18(1)^2 + 36(1)] - [3(0)^3 - 18(0)^2 + 36(0)]$$

$$= \pi [3 - 18 + 36 - (0)]$$

$$= 21\pi\ units^3$$

Therefore,

Volume of the solid generated $= 21\pi - \frac{41\pi}{30}$

$$= \frac{589\pi}{30}\ units^3$$

(b) The diagram below shows the curves $y = \cos x$ and $y = \sin x$. Determine the area bounded by the curves between $x = \frac{\pi}{4}$ and $x = \frac{3\pi}{2}$.

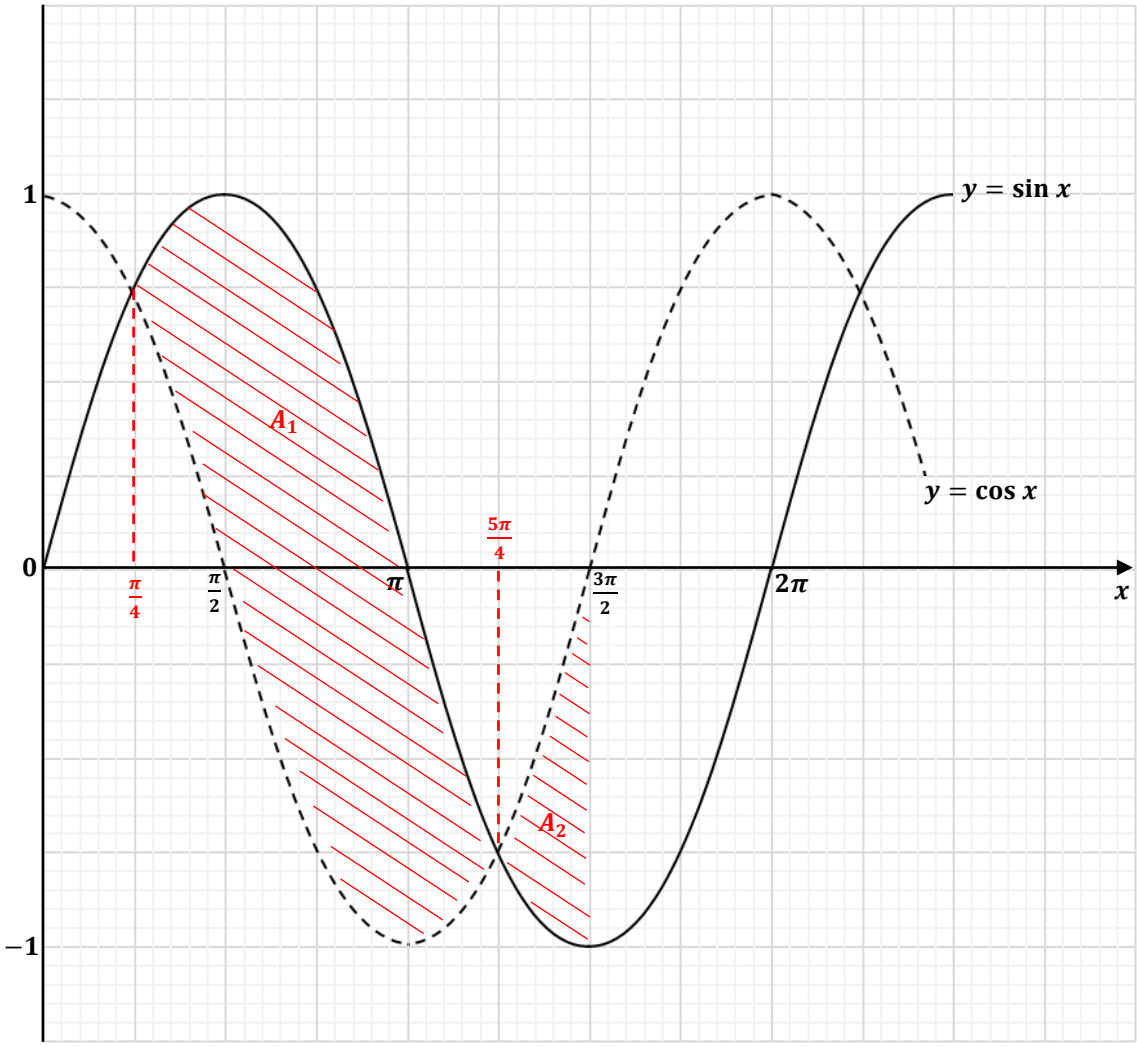


To determine the area bounded by the curves between $x = \frac{\pi}{4}$ and $x = \frac{3\pi}{2}$, it is

Total area $=$ Area of $A_1 +$ Area of $A_2$

$$\text{Area of } A_1 = \int_{\frac{\pi}{4}}^{\frac{5\pi}{4}} (\sin x - \cos x)\, dx$$

$$= [-\cos x - \sin x]_{\frac{\pi}{4}}^{\frac{5\pi}{4}}$$

$$= \left[-\cos\left(\frac{5\pi}{4}\right) - \sin\left(\frac{5\pi}{4}\right)\right] - \left[-\cos\left(\frac{\pi}{4}\right) - \sin\left(\frac{\pi}{4}\right)\right]$$

$$= \left[-\left(-\frac{\sqrt{2}}{2}\right) - \left(-\frac{\sqrt{2}}{2}\right)\right] - \left[-\left(\frac{\sqrt{2}}{2}\right) - \left(\frac{\sqrt{2}}{2}\right)\right]$$

$$= \left(\frac{\sqrt{2}}{2} + \frac{\sqrt{2}}{2}\right) - \left(-\frac{\sqrt{2}}{2} - \frac{\sqrt{2}}{2}\right)$$

$$= \frac{\sqrt{2}}{2} + \frac{\sqrt{2}}{2} + \frac{\sqrt{2}}{2} + \frac{\sqrt{2}}{2}$$

$$= 4\left(\frac{\sqrt{2}}{2}\right)$$

$$= 2\sqrt{2} \text{ units}^2$$

Also,

$$\text{Area of } A_2 = \int_{\frac{5\pi}{4}}^{\frac{3\pi}{2}} (\cos x - \sin x)\, dx$$

$$= [\sin x + \cos x]_{\frac{5\pi}{4}}^{\frac{3\pi}{2}}$$

$$= \left[\sin\left(\frac{3\pi}{2}\right) + \cos\left(\frac{3\pi}{2}\right)\right] - \left[\sin\left(\frac{5\pi}{4}\right) + \cos\left(\frac{5\pi}{4}\right)\right]$$

$$= [(-1) + 0] - \left[\left(-\frac{\sqrt{2}}{2}\right) + \left(-\frac{\sqrt{2}}{2}\right)\right]$$

$$= (-1) - \left[\left(-\frac{\sqrt{2}}{2}\right) - \left(\frac{\sqrt{2}}{2}\right)\right]$$

$$= -1 + \frac{\sqrt{2}}{2} + \frac{\sqrt{2}}{2}$$

$$= -1 + 2\left(\frac{\sqrt{2}}{2}\right)$$

$$= -1 + \sqrt{2}$$

$$= \left(\sqrt{2} - 1\right) \text{ units}^2$$

Therefore,

Total area = Area of $A_1$ + Area of $A_2$

$= 2\sqrt{2} + \sqrt{2} - 1$

$= \left(3\sqrt{2} - 1\right)$ units$^2$

(c) On the surface of the moon, the acceleration due to gravity is $-1.625\ m/s^2$. A rocket is launched away from the moon with an initial height of 1 200 metres and an initial velocity of 30 $m/s$.

Determine the velocity **and** height of the rocket 5 seconds after launch. [7]

We have,

$g = -1.625\ ms^{-2}$

$s = 1200\ m$

$u = 30\ ms^{-1}$

$s = ut + \frac{1}{2}at^2$

When $t = 5\ s$,

$s = 30(5) + \frac{1}{2}(-1.625)(5)^2$

$= 150 - 20.3125$

$= 129.6875\ m$

Therefore,

Total height after 5 seconds = 1200 + 129.6875

$= 1329.6875\ m$

Now,

$v = u + at$

$= 30 + (-1.625)(5)$

$= 21.875\ ms^{-1}$

$\therefore$ The velocity of the rocket 5 seconds after launch is $21.875\ ms^{-1}$.

The height of the rocket 5 seconds after launch is $1329.6875\ m$.

(d) Determine $\int \cos^3 2x \sin 2x\ dx$. [4]

$\int \cos^3 2x \sin 2x\ dx = \int (\cos 2x)^3 \sin 2x\ dx$

Let $u = \cos 2x$

$\frac{du}{dx} = -2\sin 2x$

$dx = \frac{du}{-2\sin 2x}$

Now,

$\int \cos^3 2x \sin 2x\ dx = \int u^3 \sin 2x \cdot \frac{du}{-2\sin 2x}$

$= -\frac{1}{2}\int u^3\ du$

$= -\frac{1}{2}\left[\frac{u^4}{4}\right] + c$

$= -\frac{1}{8}u^4 + c$

$= -\frac{1}{8}\cos^4 2x + c$

**Total: 25 marks**